ClairGeo AP2

Multi-band In-ground Dual-mode Parking Detector

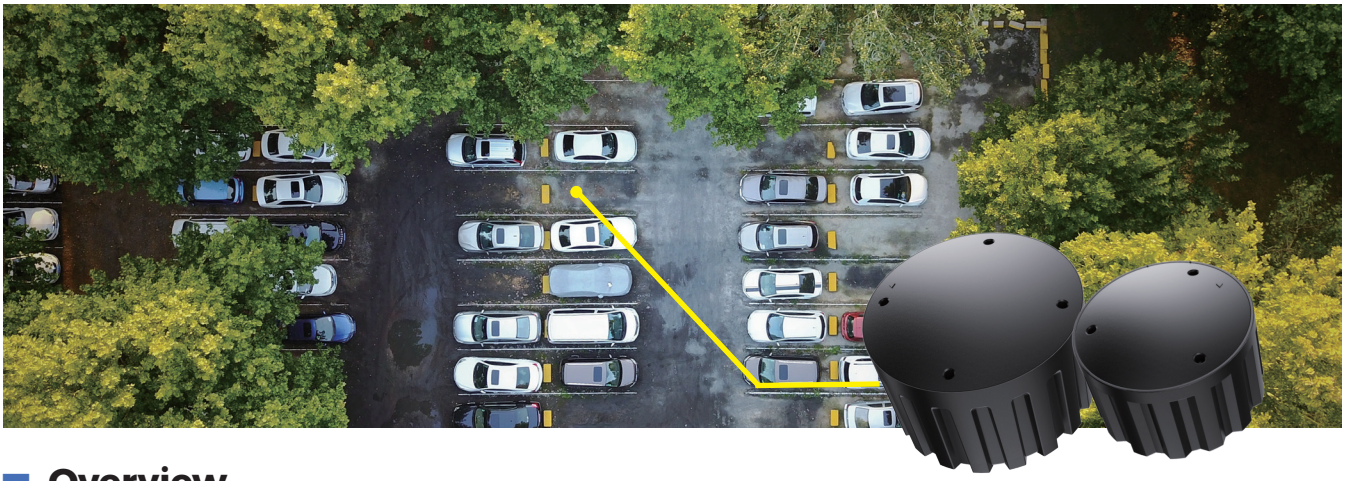

Overview

The ClairGeo-AP2 wireless sensor integrates magnetic field and micro-radar detection technologies, delivering the precision and reliability required to meet the most sophisticated demands of the parking management market. Its superior detection accuracy—combined with enhanced dual-mode connectivity—makes it a core component of the world's most advanced parking guidance systems.

Designed for seamless global deployment, the sensor features flexible connectivity options:

LoRaWAN: Full multi-band support (CN470, EU868, AS923, US915) compliant with LoRaWAN v1.0.3 Class A, ensuring robust, long-range coverage.

NB-IoT: Comprehensive multi-band support across B3, B5, B8, and B28, providing reliable cellular IoT connectivity in licensed spectrum.

This dual-network, multi-band capability guarantees optimal performance and deployment flexibility across all major regions worldwide.

Key Features

Dual-Sensor Fusion Technology

Integrates geomagnetic and 24GHz microwave radar detection for unparalleled accuracy and environmental adaptability.

Ultra-High Detection Accuracy

Delivers industry-leading vehicle detection rates (above 99%), ensuring reliable data for critical decision-making.

Extended Battery Life

Engineered with ultra-low power consumption, enabling 3-5 years of maintenance-free operation on a single battery.

Robust & Stable Connectivity

Guarantees consistent and reliable data transmission even in challenging urban RF environments.

Advanced Interference Immunity

Designed to resist common environmental and wireless interference, maintaining performance in complex scenarios.

Remote Management & OTA Updates

Fully remotely configurable and maintainable with Over-the-Air (OTA) firmware upgrades for lifetime value enhancement.

Specification

	ClairGeo-AP2LR	ClairGeo-AP2NB
Detection Method	Geomagnetic Induction and 24G Microwave Radar Detection	Geomagnetic Induction and 24G Microwave Radar Detection
Communication Method	LoRa Frequency: CN470, EU868, AS923, US915 LoRaWAN V1.0.3 Class A	NB IOT: B3, B5, B8, B28
Detection Accuracy	≥99%	≥99%
Battery Capacity	AP2LR-Big: 3.6V 38Ah AP2LR-Small: 3.6V 19Ah	3.6V 38Ah
Lifespan	AP2LR-Big: 5 years (12 stops per day) AP2LR-Small: 3 years (12 stops/day)	5 years (12 stops per day)
Transmit Power	MAX 23dBm	MAX 23dBm
Receiver Sensitivity	–136dBm	–115dBm
Response Time	Vehicle/Presence Detection: 1 s (default), configurable from 1 to 60 s. Clear/No-Vehicle Detection: 1 s (default), configurable from 1 to 60 s.	Vehicle/Presence Detection: 1 s (default), configurable from 1 to 60 s. Clear/No-Vehicle Detection: 1 s (default), configurable from 1 to 60 s.
Water Coverage Detection	The sensor features water coverage detection, which allows it to automatically determine if it is submerged and intelligently switch to magnetic-field only mode.	The sensor features water coverage detection, which allows it to automatically determine if it is submerged and intelligently switch to magnetic-field only mode.
Housing Material	Nylon (ultraviolet resistant plastic)	Nylon (ultraviolet resistant plastic)
IP Class	IP68	IP68
Installation	In-ground installation	In-ground installation
Operating Temperature	-35 to 75°C	-35 to 75°C
Storage Temperature	-40 to 80°C	-40 to 80°C
Dimension	AP2LR-Big: Diameter 130mm, Height 78mm AP2LR-Small: Diameter 108mm, Height 68mm	Diameter 130mm, Height 78mm
Weight	AP2LR-Big: 1060g AP2LR-Small: 660g	1060g
Firmware Upgrade	OTA (Over-the-Air)	OTA (Over-the-Air)

Mechanical Drawing

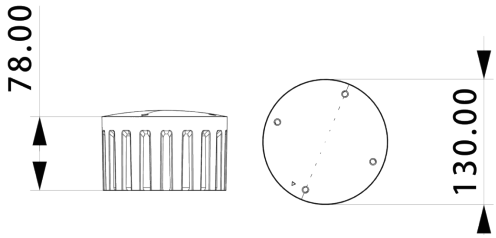

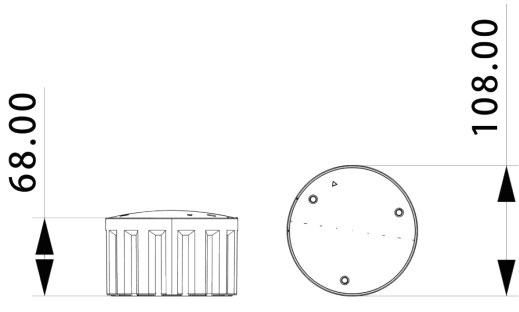

Unit: mm

ClairGeo AP3

Multi-band In-ground Triple-mode Parking Detector

Overview

The ClairGeo-AP3 is a next-generation wireless parking sensor that combines magnetic field, micro-radar, and photosensitive detection technologies to deliver exceptional precision and reliability for advanced parking guidance systems. Its superior accuracy, enhanced dual-mode connectivity, and flexible global deployment make it the ideal solution for sophisticated parking management applications worldwide.

The sensor offers seamless, region-optimized connectivity through two robust protocols:

LoRaWAN: Full multi-band support (CN470, EU868, AS923, US915) compliant with LoRaWAN v1.0.3 Class A, enabling long-range, low-power operation.

NB-IoT: Comprehensive multi-band coverage (B3, B5, B8, B28) for reliable, licensed-spectrum cellular connectivity.

This multi-network, multi-band architecture ensures optimal performance, maximum deployment flexibility, and future-proof operation in all major global markets.

Key Features

Triple-Sensor Fusion Technology

Integrates geomagnetic, 24GHz microwave radar and photosensitive detection for unparalleled accuracy and environmental adaptability.

Ultra-High Detection Accuracy

Delivers industry-leading vehicle detection rates (above 99%), ensuring reliable data for critical decision-making.

Extended Battery Life

Engineered with ultra-low power consumption, enabling 5 years of maintenance-free operation on a single battery.

Robust & Stable Connectivity

Guarantees consistent and reliable data transmission even in challenging urban RF environments.

Advanced Interference Immunity

Designed to resist common environmental and wireless interference, maintaining performance in complex scenarios.

Remote Management & OTA Updates

Fully remotely configurable and maintainable with Over-the-Air (OTA) firmware upgrades for lifetime value enhancement.

Specification

	ClairGeo-AP3LR	ClairGeo-AP3NB
Detection Method	Geomagnetic Induction, 24G Microwave Radar and Photosensitive Detection	Geomagnetic Induction, 24G Microwave Radar and Photosensitive Detection
Communication Method	LoRa Frequency: CN470, EU868, AS923, US915 LoRaWAN V1.0.3 Class A	NB IOT: B3, B5, B8, B28
Detection Accuracy	≥99%	≥99%
Battery Capacity	3.6V 38Ah	3.6V 38Ah
Lifespan	5 years (12 stops per day)	5 years (12 stops per day)
Transmit Power	MAX 23dBm	MAX 23dBm
Receiver Sensitivity	–136dBm	–115dBm
Response Time	Vehicle/Presence Detection: 1 s (default), configurable from 1 to 60 s. Clear/No-Vehicle Detection: 1 s (default), configurable from 1 to 60 s.	Vehicle/Presence Detection: 1 s (default), configurable from 1 to 60 s. Clear/No-Vehicle Detection: 1 s (default), configurable from 1 to 60 s.
Water Coverage Detection	The sensor features water coverage detection, which allows it to automatically determine if it is submerged and intelligently switch to magnetic-field only mode.	The sensor features water coverage detection, which allows it to automatically determine if it is submerged and intelligently switch to magnetic-field only mode.
Housing Material	Nylon (ultraviolet resistant plastic)	Nylon (ultraviolet resistant plastic)
IP Class	IP68	IP68
Installation	In-ground installation	In-ground installation
Operating Temperature	-35 to 75°C	-35 to 75°C
Storage Temperature	-40 to 80°C	-40 to 80°C
Dimension	Diameter 110mm, Height 100mm	Diameter 110mm, Height 100mm
Weight	940g	940g
Firmware Upgrade	OTA (Over-the-Air)	OTA (Over-the-Air)

Mechanical Drawing

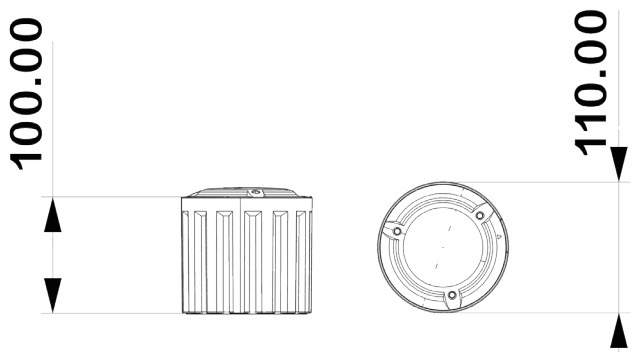

Unit: mm

ClairGeo APS

Multi-band Surface-mount Parking Detector

Overview

The ClairGeo-APS is a low-profile, surface-mount parking detector that integrates dual-mode geomagnetic and 24GHz radar sensing to achieve industry-leading detection accuracy (≥99%) for parking spaces. Leveraging our proprietary, high-performance LoRa communication protocol, the device ensures stable, long-range data transmission with minimal power consumption.

Dual Sensing Technology: Combining geomagnetic anomaly detection with precise 24GHz micro-radar, the sensor delivers exceptional reliability across all vehicle types and environmental conditions, eliminating false positives and ensuring precise vacancy status.

Global Connectivity: The detector features ultra-flexible, region-specific connectivity with wideband LoRa support across all major global frequency plans: CN470, EU868, AS923, US915, AU915, KR920, and IN865. This ensures seamless, compliant deployment anywhere in the world.

Designed for discreet, surface-mount installation, the ClairGeo-APS is the robust, intelligent, and globally compatible core of modern parking management and guidance systems.

Key Features

Surface-Mount, Non-Intrusive Installation

Designed for quick, flexible surface mounting without breaking ground—minimizing installation cost and complexity while preserving infrastructure.

Dual-Sensor Fusion Technology

Integrates geomagnetic and 24GHz radar detection for unparalleled accuracy and environmental adaptability across all vehicle types and weather conditions.

Global Multi-Band Connectivity

Supports worldwide deployment with flexible LoRa frequency plans—including CN470, EU868, US915, AS923, AU915, KR920, and IN865—ensuring compliance and robust performance in any region.

Industry-Leading Detection Accuracy

Delivers exceptional vehicle detection rates exceeding 99%, providing reliable, real-time data for parking management and guidance systems.

Long-Life Battery Performance

Engineered for ultra-low power consumption, enabling 3 years of maintenance-free operation on a single battery.

Reliable Data Transmission

Ensures stable, consistent connectivity even in dense urban environments with challenging RF interference.

Advanced Interference Immunity

Resists common environmental and wireless interference to maintain performance in complex, real-world scenarios.

Specification

	ClairGeo-AP3LR
Detection Method	Geomagnetic Induction and 24G Microwave Radar Detection
Communication Method	LoRa Frequency: CN470, EU868, AS923, US915, AU915, KR920, IN865 LoRaWAN V1.0.3 Class A
Detection Accuracy	≥99%
Battery Capacity	3.6V 17Ah
Lifespan	3 years (12 stops per day)
Transmit Power	MAX 23dBm
Receiver Sensitivity	–136dBm
Response Time	Vehicle/Presence Detection: 1 s (default), configurable from 1 to 60 s. Clear/No-Vehicle Detection: 1 s (default), configurable from 1 to 60 s.
Water Coverage Detection	The sensor features water coverage detection, which allows it to automatically determine if it is submerged and intelligently switch to magnetic-field only mode.
Housing Material	Nylon (ultraviolet resistant plastic)
IP Class	IP68
Installation	In-ground installation
Operating Temperature	-35 to 75˚C
Storage Temperature	-40 to 80˚C
Dimension	Diameter 140mm, Height 39.8mm
Weight	530g
Firmware Upgrade	OTA (Over-the-Air)

Mechanical Drawing

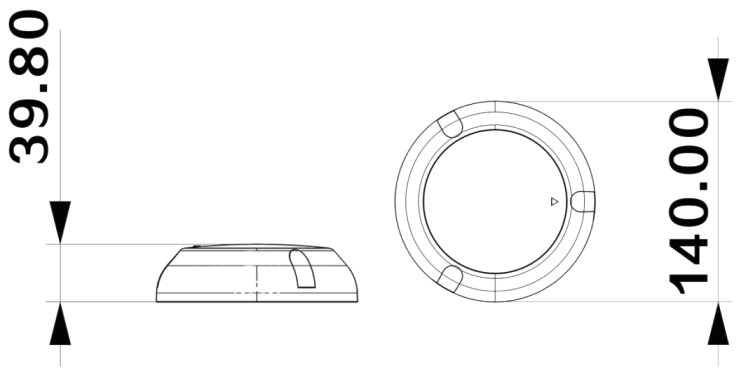

Unit: mm

ClairGeo APLRG

Accessory: LoRa Gateway

Overview

The ClairGeo-APLRG Multi-Mode LoRa Gateway is a versatile and robust networking solution designed for customizable and reliable IoT deployments. Pre-configured with our proprietary high-performance LoRa protocol, it delivers seamless communication and exceptional adaptability.

Engineered for flexibility, the gateway features modular expansion interfaces, allowing you to easily replace or add communication modules to meet specific networking requirements. Its integrated local web server provides advanced, user-friendly configuration options—enabling full customization without external dependencies.

Built to endure demanding environments, the ClairGeo-APLRG has undergone rigorous waterproofing and environmental stress testing, ensuring reliable operation under extreme outdoor and industrial conditions. Ideal for smart parking, asset tracking, and urban IoT applications, it combines deployment flexibility with enterprise-grade durability.

Key Features

Global Multi-Band Support

Engineered for worldwide deployment, the gateway supports multiple frequency bands to ensure regional compliance and optimal performance in any location.

High-Concurrency Data Handling

Designed for large-scale IoT networks, it enables high-speed, simultaneous communication with thousands of endpoints, ensuring reliable data flow in dense node environments..

Flexible Mounting Options

Offers versatile installation with clamp or wall-mount configurations, allowing for quick and adaptable deployment in various urban and industrial settings.

High-Speed LTE Cat 4 Backhaul

Features integrated LTE Cat 4 connectivity for robust, high-speed internet backhaul, ensuring stable and secure data transmission to the cloud.

Future-Ready Modular Architecture

Built with a multi-mode, hardware-expandable design, it supports easy module upgrades and customization to adapt to evolving network standards and technologies.

Rugged IP67 Enclosure

Constructed with a durable, IP67-rated waterproof and dustproof housing, guaranteeing reliable operation in harsh outdoor and industrial environments.

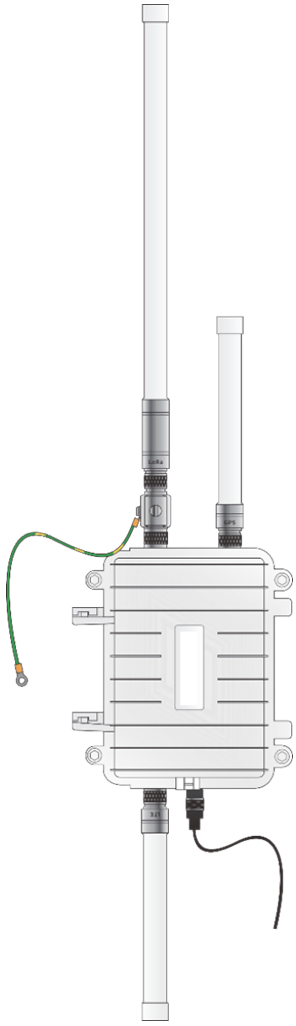

Specification

	ClairGeo-APLRG
Power Supply	Power Voltage: 12VDC (10-22VDC) Power Current: 200mA (room temperature)
Operating Temperature	-40 to 85˚C
Storage Temperature	-40 to 125˚C
Radio Frequency Modulation	LoRa
Transmit Power	MAX 22dBm
Receiver Sensitivity	–141dBm
Operating Frequency Band	470MHz-480MHz/868MHz/915MHz
Frequency Stability	2.5PPM
Backhaul Mode	4G/ Ethernet
4G Frequency Band	LTE-FDD: B1/B3/B5/B8 LTE-TDD: B34/B38/B39/B40/B41 WCDMA: B1/B5/B8 GSM/EDGE: B3/B8
Protocol	LoRa private protocol
IP Class	IP67
Dimension	210mm*175mm*75mm

Mechanical Drawing

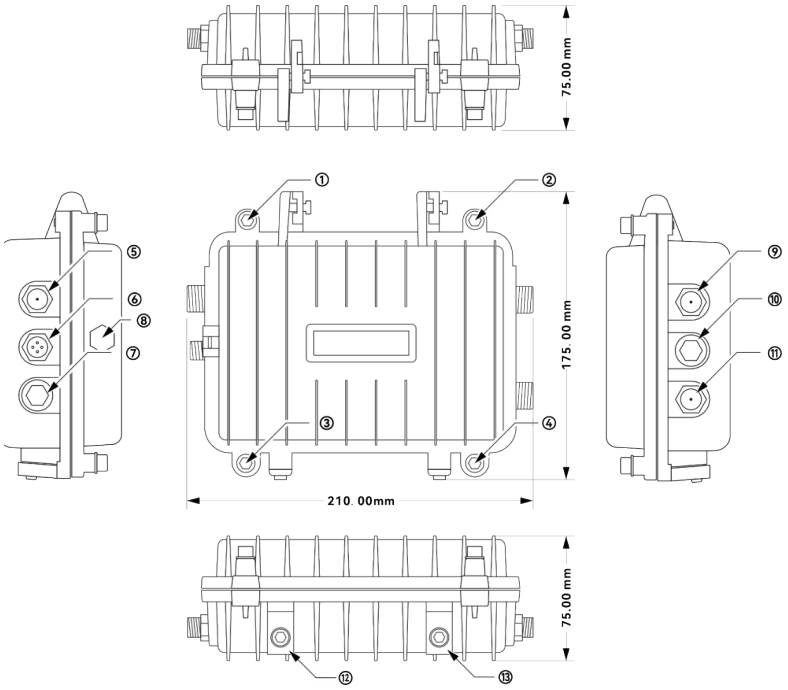

Note:

1,2,3,4: Internal hex screw (for SIM card installation after unscrewing).
5: LTE antenna interface.
6: Power interface (12V).
7: RJ45 Ethernet interface (LAN gateway). Includes network port plug, gateway length.
8: Vent valve.
9: LoRa antenna interface (also serves as a lightning arrester interface).
10: Reserved interface.
11: GPS antenna interface (optional, blocked by default).
12,13: L-shaped bracket installation interface.

Ordering Information

Part Number	Description
ClairGeo-AP2LR-Big	In-ground installation LoRaWAN dual-mode (geomagnetic & radar) parking sensors with big size battery (38Ah)
ClairGeo-AP2LR-Small	In-ground installation LoRaWAN dual-mode (geomagnetic & radar) parking sensors with small size battery (19Ah)
ClairGeo-AP2NB	In-ground installation NB-IoT dual-mode (geomagnetic & radar) parking sensors
ClairGeo-AP3LR	In-ground installation LoRaWAN triple-mode (geomagnetic & radar & photosensitive) parking sensors
ClairGeo-AP3NB	In-ground installation NB-IoT triple-mode (geomagnetic & radar & photosensitive) parking sensors
ClairGeo-APS	Surface-mount installation LoRaWAN dual-mode (geomagnetic & radar) parking sensors
ClairGeo-APLRG	LoRa Gateway for ClairGeo-AP parking sensors